W2NPT

The Resonator

Volume 2, Number 8 www.FairLawnARC.org August 2017

The Official Newsletter of The Fair Lawn (NJ) Amateur Radio Club

From The President:

To all FLARC Members and Friends,

The month of July certainly passed by too fast – with the Sussex Ham Fest and the VanFest the same day. I would like to thank Van W2DLT and Lori Vant Slot for inviting us members to their country home and offering us good food, conversation and a very relaxing atmosphere.

Then we had Nathaniel Frissel W2NAF and his presentation on Propagation & the Solar Eclipse that is happening on August 21st. His knowledge on this subject was far more than some of us have experienced ourselves. Nathaniel certainly is on his way to extremely bigger and better things. It takes curiosity and drive to peruse the future of what is going on out there beyond our own eyes.

Thanks goes to Rob Roschewsk, KA2PBT, Northern New Jersey Section Manager for acknowledging our club's achievements and giving us the book "Propagation and Radio Science" to add to our library.

Let's get ready for the month of August with additional events that can be found on the club website calendar. There is so much information there, so take time to review and consider volunteering for something that may interest you.

Thank you.
Judith, KC2LTM
President

Inside This Issue

1	President's Message
1	Member Profile : Robert DiSiena (KD2NOG)
3	W2NPTRepeater Update
8	Save The Date: FLARC Reunion Night August 18th
9	VanFest II
11	Save The Date: Solar Eclipse QSO Party August 21st

New Member Profile

NAME: **Robert DiSiena** CALL: **KD2NOG**

What do you do/what did you do for a living?

I am currently involved in myriad of different endeavors. The most lucrative and what keeps the power supply from going dim is my visual communications work. I help in creative ideas, I develop proper production of adverts, magazine, digital and even further in the rabbit hole with retouching photos, be it color correction or just bringing a dull photo to a picture post card creation. I have worked with countless service bureaus across America and around the world, from beautiful Clifton NJ to the land of Andorra and no that is not the mother land of the star wars Ewoks as I thought.

I also am involved in helping with safety. This started when I was working for UPS and became a designated responder responding to all Hazmat spills, leaks and other incidents promptly. I was responsible to properly contain, remove and dispose of all hazmat and other spills. Responsible to ensure the safety of all employees by following all UPS, State and Federal protocols and I still have some of the acid burns to prove it. That occupation not only tested you physically but your mental faculties as well.

I moved from there and became certified for CRP (Cardiopulmonary Resuscitation), AED (Automated External Defibrillation), 911 (Local emergency dispatch) and EMD (Emergency Medical Dispatch. I worked for a local private company for a few years dispatching for Fire, burglary and even some access control.

Continued on page 2 **Error! Bookmark not defined.**.

The Club

Fair Lawn ARC is the friendliest ham club around, with five operating positions in a permanent clubhouse. Visitors and guests are always welcome. The club is open every Friday night from NLT 6:30 PM. Business meetings are the first Friday of the month at 7:30PM.

2017 Officers and Committees

President	**Judith Shaw**	**KC2LTM**
Vice President	**Fred Wawra**	**W2ABE**
Treasurer	**Nancy Beattie**	**N2FWI**
Secretary	**Randy Smith**	**WU2S**
Trustee	**J Cooper**	**W2JC**
Trustee	**Dave Marotti**	**NK2Q**
Trustee	**Steve Wraga**	**WA2BYX**
Field Day	**Steve Wraga**	**WA2BYX**
Health and Welfare	**Al Rasmussen**	**WA2OWL**
Speakers	**Lowell Vant Slot**	**W2DLT**
Publicity	**Ed Efchak**	**WX2R**
Publicity	**Gene Ottenheimer**	**WO2W**
Publicity	**Susan Frank**	**W6SKT**
Program	**Lowell Vant Slot**	**W2DLT**
Publicity	**Al Rasmussen**	**WA2OWL**
Publicity	**Karl Frank**	**W2KBF**
Publicity	**Judith Shaw (ex officio)**	**KC2LTM**
Social Media	**Dave Marotti**	**NK2Q**
Video/YouTube	**Thom Guida**	**W2NZ**
Contest	**Tom Stefanic**	**N2ST**
VE Liaison	**Gene Ottenheimer**	**WO2W**
VE Liaison	**Pete Senesi**	**KD2BMX**
Education	**Gordon Beattie**	**W2TTT**
Education	**Fred Wawra**	**W2ABE**
History	**Gene Ottenheimer**	**WO2W**
History	**Lowell Vant Slot**	**W2DLT**
History	**Rosalyn Roimisher**	**KD2GKA**
Photographer	**Don Cassarini**	**N2PRT**
W2NPT Trustee	**Paul Cornett**	**W2IP**
Technical	**Paul Cornett**	**W2IP**
Technical	**Randy Smith**	**NU2S**
RACES Liaison	**Steve Wraga**	**WA2BYX**
Newsletter Editor	**Ed Efchak**	**WX2R**

Member Profile (Continued)

How did you get interested in ham radio?

My evolution into ham radio started with preparation and safety. I am a passionate gun owner, enjoy shooting rifles, hand guns and basically anything that goes boom! From there I became more aware of home defense and started to learn how to set up basic shelter, start a fire and being self-reliant and being a minimalist.

I am by no means perfectly rounded to handle all emergencies but I was surprised to realize how much more equipped and planned I am than others. This awakening came to fruition when hurricane Sandy collided with our small but proud state. The lights went out… we all take electricity for granted on how we rely on its warm hum. I have a backup battery supply for my computers, regular batteries & candles, as well as a small amount of extra gasoline. It came as a shock to me as my tenant and local friends didn't even have the smallest amount of accumulation of basic supplies. I let a few of them power their cell phones, which they couldn't make calls on anyway and just chuckled as some of them talked about getting to a store for bread and milk. No power, no refrigerator, good luck with your milk. A few days later I was able to get in touch with my folks who live down the shore and were evacuated. I don't remember exactly who came to inform my folks that they were relocating people in their area but there was a local broadcast of it. I remember talking to my father and I asked him why he waited so long before leaving the house and he told me that he had a radio but no batteries. I guess it was just a conversational piece. So this all was a cathartic experience for me. One, it showed me, make better friends, second I need to add an alternate method of communication. Thus my sojourn into the realm of ham radio.

Continued on page 10.

Do You Know A Fair Lawn Ham Who Is Currently Not A FLARC Member?

Let anyone on the Publicity Committee know for an invitation to a special outreach to Reunion Night on August 18th.

It Bears Repeating:
A W2NPT Repeater Update

Paul (W2IP), our license trustee, has the following update on the recent repeater changes:

I wish to thank everyone for their patience while the technical committee has been troubleshooting the purported interference on the repeater. I have decided in everyone's best interest to revert back to the audio CTCSS signaling (PL) Tone of 167.9 Hz or EIA code 6Z while keeping the transmitter PL tone disabled on the repeater.

The hang time has been extended for 2 seconds as before.

I know many of you are saying, "Oh-no not again." Believe me, I'm not doing this to anger anyone; it's all part of the process of identifying and proving where problems exist and searching for a reasonable remedy to those problems. At this point in time, this appears to be the best remedy with the resources at hand.

Paul, W2IP
Tech Committee, FLARC

Veep Beeps

Ham radio is a hobby in which there is service to the community and practice for emergencies and involvement in new and exciting technologies used in communication.

At Fair Lawn radio club we are involved in all of these plus much more! The learning never stops and along with that the excitement that goes with it! You can buy a very complicated radio/transceiver but you can also build many things to go along with it or things that stand alone such as antennas, etc.

This leads us to the "Maker" movement. Hams were really part of the first makers in the early days of radio!

So come and join us as we leap into the next level of technology!

Fred W2ABE

The Monday Night *Near and Far* Net

Who did I miss?? Let Ed (WX2R) know and we'll add you to our N&F roster and Hall of Fame.

The net runs every Monday at 2000 Eastern Time on the repeater. Everyone is welcome. EchoLink friendly!

Thanks for checking in!

WO2W
WX2R
W2JC
W2DLT
K2RJF
WA2BYX
K2TRW/BM2NHC
KC2TBD
KC2ZX
KD2BRV
KD2KLN
N1STU
N2ST
NQ2T
W2IP
W2KBF
W2NZ
W6SKT
WA2OWL
WI2W
WU2S
N2HIP
KD2BKD
KA2YRA
KD2NOG
KC2ZX
W2TAB
N2VHZ
W2TU
K2BIX...and???

Eleven check-ins on July 10th, twelve on July 17th and 31st and fourteen check-ins on July 24th ...quite nice numbers on hot Summer nights. Thanks to all.

MASTER EVENT CALENDAR

August 18	A Look Back: FLARC Over The Years -- a panel discussion (Clubhouse)
August 19-20	North American SSB QSO Party (Clubhouse)
August 21	Solar Eclipse QSO Party [club activity]
September 10	ARRL New Jersey State Convention (Mullica Hill)
September 15	Field Day 2018 Preliminary Planning (Clubhouse)
September 16-17	NJ QSO Party (Clubhouse)
September 23	Portable Day With BARA
October 15	Fair Lawn Street Fair [club activity]
October 20	Ria Jairam (N2RJ) "YLs, SDR and Setting Up A World Class Station" (Senior Center)
November 17	Program TBD
November 24	FLARC Auction/Senior Center
December 1	FLARC ANNUAL MEETING and Dinner (Senior Center)
December 15	Mike Lisenco (NY2RB) ARRL Hudson Division President (Senior Center)

Upcoming Activities

TBA	Radio Astronomy and Amateur Radio
TBA	W1TP Enigma Presentation w/Fair Lawn Public Library
TBA	EMCOMM and its local impact

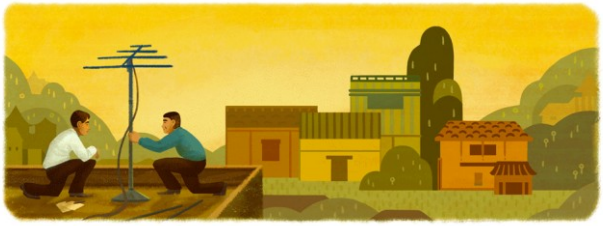

Hidetsugu Yagi's 130th Birthday Google Doodle

Follow FLARC ON THE WEB

Facebook: http://facebook.FairLawnARC.org

Twitter: @FairLawnARC

Blog: http://blog.FairLawnARC.org

Youtube: http://youtube.FairLawnARC.org

FLARC VEC Exams

Our next test sessions are scheduled for **Saturday, August 12th and 26th** beginning at 09:00 at the Community Center. No advanced registration is required but always appreciated. The fee is $15.00 (cash or check).

Please bring positive identification (license, passport, etc.), your original license and a copy, original CSCE and a copy (if credit is needed).

The full exam schedule is on the club calendar at the FairLawnARC.org website. For further information contact VE-Liason@FairLawnARC.org.

Please refer also to the "License Exams" link on the main website--

http://testing.FairLawnARC.org

We appreciate your support of the Fair Lawn Amateur Radio Club!
This is your Club! Be part of it!

Field Day Post Mortem and 2018 Plans

On July 7th, a post mortem on Field Day 2017 was held prior to the business meeting.

There was agreement that this was the best Field Day ever and that all the pre-planning helped in a very well executed event. There was considerable interest and input from the membership looking ahead to 2018.

A number of suggestions for improvement were offered:

- We need gain antennas for HF.
- Add an 80 Meter vertical in addition to the dipole.
- We need written schedules for operators in the tent.
- We need 3 to 4 available stations so that potential operators are not turned away.
- We will need more volunteer operators to man additional stations.
- Suggest that we run 3A with the 3rd station offering flexible operations for drop-in operators.
- It was noisy in the tent with 2 stations. 3 would be even worse.
- Purchase one or two additional IC-746 PROII radios and get permission to take all 3 or 4 to Field Day. If club members learn on one radio, they will be good to go on the others. One radio (#3) could be used as the GOTA station on Saturday afternoon but become a regular station in the evening. The other 746 (#4) could serve as the VHF station.
- We need to find a way to make members and visitors feel more welcome.
- We need to have a map of the site so that the Ridgewood tent is placed properly.

VE Testing: Just a reminder that FLARC has **four** VE test sessions over the Summer -- July 8 and 22nd and **August 12 and 26th.**

2017 FLARC Speaker Series Locations:

SPEAKERS WHO ARE FLARC MEMBERS:
FLARC CLUBHOUSE

SPEAKERS WHO ARE INVITED GUESTS:
FAIR LAWN SENIOR CENTER

Notes From All Over

Interesting Echolink net check in by Dave (KD2MOB) from Copley Square in Boston on July 10th.

The July Field Day issue of *The Resonator* had 67 members opening the newsletter email and an additional 50 readers from our friends list. Your editor and co-editor say "thanks".

Good to see PSK31 on the club screen at position 2 by Mike (KZ2ZX) on July 14th.

Fred W2ABE has spent some time sprucing up the workbench area, with nice lighting and an outlet strip on the back wall ... following a major cleanup of the workbench area by Paul W2IP ...TNX Guys!!

Corrections and Amplifications

Editor's apologies to Gordon (W2TTT), Nancy (N2WFI) and Thom (W2NZ) for omitting their names in the July 4th fireworks story. They were indeed there!

And to Carol (KD2NMV) for mentioning her as "Carolyn" in the July issue. Sorry!!

July 2017 Blog Traffic

A record month in both page views and visitor traffic--following June which was the *second highest* since we started keeping count. Here is the data:

	July 2017	July 2016	Change
Views	862	210	+310%
Visitors	282	80	+253%
Posts	14	11	+27%

And we continue to grow!! There is new content nearly every day so it's really worth the look to both FairLawnARC.org and the blog.

http://blog.FairLawnARC.org

Sussex Ham Fest 2017

Brian (KD2KLN) displays a newly purchased antenna

Fred (W2ABE), Judith (KC2LTM) and Thom (W2NZ)

Robert (KD2NOG) and Gene (WO2W)

John (KC2OCD) with some newly purchased antenna masts.

Kai (K2TRW) talks business with some prospects

Gordon (W2TTT) selling at the vendor tables

Tech Talk
August 2017
Get on HF for Under $100

Many new hams see the cost of HF rigs as a disincentive to upgrading to a General class license. The great attraction of worldwide communication is offset by the cost and complexity of modern HF gear. Older rigs are more affordable but may have been poorly maintained and become another source of frustration. So, what can you do to get on HF without breaking the bank and driving yourself crazy in the process?

One solution is a modern, mostly assembled HF kit called the BITX40. It is designed and built in India. Including quick DHL shipping to the USA, the cost is $69. The kit includes a populated main board, a Raduino board for the VFO, and various connectors. To assemble the kit into working order just requires soldering some wires to external components like the antenna connector, the power supply and the volume control. Both circuit boards are fully tested before they are shipped to you.

There are two wonderful things about this kit. One is that the board is laid out so that you can easily trace each section of the radio. Why would you care? This layout makes it very easy to learn about how a radio really works by giving you the ability to measure the signals in any stage. The second remarkable thing is the large and active worldwide community of BITX40 builder, modifiers and users. There are many interesting modifications and extensions that the community developed. They also provide the support to troubleshoot and fix any problems or misunderstandings you may have.

Best of all, this rig is an SSB radio, so if you can speak into a microphone you can operate it successfully. Don't be dismayed by the 7-watt output that is standard. Ask one of the FLARC members, like Steve WI2W, who frequently operate low power about their success in making long distance contacts.

To dress up the completed project, you can buy a separate case or print one on a 3D printer.

73's Randy (WU2S)

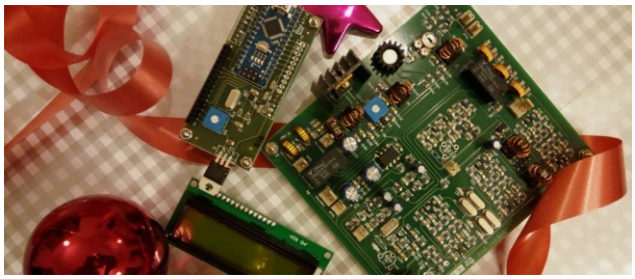

References

1) Manufacturer = http://www.hfsigs.com/
2) Community = https://groups.io/g/BITX20
3) Aluminum case = https://cqbitx.blogspot.com/

3D printed case =
https://www.thingiverse.com/thing:2268267

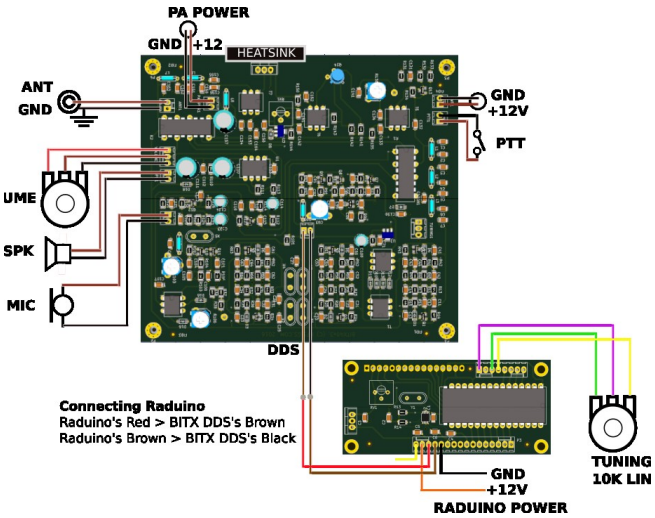

Congratulations!

Pete (KD2BMX) reports the results of the July 2017 FLARC VEC Amateur Radio Exam Sessions:

Total Number of Candidates served: 4

Name	Call	License Earned
Richard Gopsten	KD2CQ	Extra
Emil J. Marone	N2BKC	General
Bruce F. Kalogera	KC2UKA	General
Jeffrey Casson	KD2NYC	Technician

North Jersey's Ham Marketplace!

Check Out The Blog For Good Stuff
Best Area Resource Around!!
http://blog.FairLawnARC.org

BEQUEATHS AND DONATIONS

Planned gifts usually imply the family donation of amateur equipment to the club when someone has become a Silent Key. But it can be more. Club members might consider making a gift through a will or trust; gifts that help provide lifetime income to the club. Consult with your lawyer, estate planner or tax advisor if you feel such as gift is worthy.

About The Club

The Resonator is published monthly and is the official (and only) newsletter of The Fair Lawn Amateur Radio Club. FLARC was established in 1956 and has met continuously since inception.

The club meets every Friday at 7PM at the club station in The Fair Lawn Community Center, 10-10 20th Street, Fair Lawn, NJ. Business meetings are the first Friday of the month at 7:30 PM.
Visitors are always welcome at our meetings.

FLARC operates the W2NPT repeater (145.470- PL **167.9**) located atop the Community Center. The analog repeater is open to all amateurs for use without restrictions.

The club has approximately 120 members.
Dues are currently $25 per year/$20 for new members.

For more information, please see our website, at

http://membership.FairLawnARC.org

Save The Date: FLARC Reunion Night Is Friday, August 18th

Reunions always conjure up memories and that is true for both high school and ham radio. On Friday, August 18th, we've invited back some past members of the club to share some experiences about earlier days at the club and to revisit with old and new friends.

We will meet in the Card Room (as of this writing) and will have a short program of reminisinces , share some facts, and capture some oral memories. The club's physical history is not of much depth so we are using the night to fill in gaps, remember past member names and calls, and have some fun.

So far, we have received in-person commitments from Stan Sanders (KC2K), Neil Diepreveen (NU2R), Bob Killi (WA2YWY), Fred Belghaus (W2AAB), Barry Sykes (WV2X formerly WB2GHZ), Van (W2DLT) and Gene (WO2W) and we expect perhaps a few more via phone and/or Facetime.

So see you there and bring your questions!!

Who Says Ham Radio Is Boring?™

FAIR LAWN'S TECHNOLOGY HOUSE!

VanFest II

A great crowd again turned out in Lords Valley, PA for a day of casual rag chewing around the barbeque. A large thanks to Van and Lori for hosting!!

Our hosts Van (W2DLT) and Lori

Larry (W2ALY), Noel (N2OEL) , Thom (W2NZ), Peggy (KD2MYN) and John (KD2MYM)

Conversations on the deck

Van (W2DLT), Carol (KD2NMV) and Karl (W2KBF)

Ria Jairam (N2RJ) demonstrates the Flex SDR and remote operating

The confab under the canopy

A Milestone In Club Membership

The July business meeting was a lively one and there Treasurer Nancy (N2FWI) reported that the club roster now totaled 122 members. Quite an exciting milestone as it represents a new high in membership as best as we can reconstruct club membership over the now 60+ years.

Selected Years	Membership
Prior To 1970	Unknown
1970	20
1985	93
1993	102
1994	117
2014	65
2015	77
2016	99
2017	122

More From VanFest II

Sandy (KC2GIH) and Lori sample dessert.

Matt (KD2MLX) takes in the perfect day.

Member Profile (Continued)

What parts of the hobby most interest you?

The attributes of HAM radio that are the most alluring are the ability to not only have a dialogue with your local compatriots but to achieve contacts around the world. This greatly shapes your scope of influence and information gathering. The HAM community is a fantastic like-minded kinfolks as I would call us. Very respectful and always passionate about helping the acolyte in his/her new pursuit, regardless of how many times they heard the same questions. It's not very often you shall stumble across a troupe that don't guard their secrets and knowledge, comparable to an old wizard clutching tight his tome of arcane incantations.

What does belonging to FLARC mean to you?

I see this as a symbiotic relationship as the members are helping me attain greater understanding and proficiency. I in turn will provide assistance to the members and club as best of my abilities as they are requested. In this manner we can flourish as a group and continue to grow the art.

How do you/can you better contribute to the club?

To give you an accurate course to sail for the coming year I would have to know what the previous club directives were. Since I'm a new member and **HAM,** I'll give you my best perspective on this. I think we should not only concentrate on growing the art but also focus on different spheres of people. You don't have to be a truck driver to get on to a CB radio. Trying to showcase HAM to an assorted people would be a good start by going to them and not waiting for them to come to you.

What else can you tell the club about yourself and/or ham radio?

I fathom that I am not the typical HAM or what I should say not the typical person who you imagine would strut into a testing area to get licensed; but I see that as a bonus as again, we get to influence and spread the art to a diverse community.

Continued on page 15.

Nathaniel Frissell (W2NAF) And The Great Solar Eclipse of 2017

On July 21 the club was given an informative and entertaining presentation on propagation, reverse beacons and plans for the upcoming solar eclipse by Nathaniel Frissell (W2NAF) and his team from NJIT.
Frissell gave a comprehensive backgrounder, for a crowd of just over 40 attendees, to the science behind propagation studies and the citizen-science cooperation desired for the upcoming event.

FLARC plans to fully participate in the Solar Eclipse QSO Party -- so follow emails and the website blog for the latest details.

The NJIT Team (L to R)
Josh Nathaniel (W2NRF), Josh (KB2JSV) and Ann (KD2NWS)

W2NAF walks through the propagation investigation basics.

W2NAF receives a plaque of appreciation from Judith (KC2LTM)

The RadCom (UK) and QST solar eclipse covers for September

For More Information:
http://hamsci.org/seqp
http://hamsci.org/eclipse
http://FLARC.net/eclipse

Theoretics Demystified

A diode can act as a capacitor, specifically a "varactor" diode. This diode operates reversed biased so that no current flows. The amount of reverse bias controls the diode's capacitance by varying the thickness of the depletion region, which is the area between the two active semiconductor layers. This thickness determines the capacitance value. All diodes exhibit this capacitive property but the varactor/varicap diode is made to enhance this property. The varicap diode is used in tuned circuits but is implemented in the circuit in such a way that no dc flows through it. This type of diode is also used in timing circuits. It is useful because a dc voltage can be used for control of frequency or timing.

Till next time. 73.
Fred W2ABE

L to R: Karl (W2KBF), Dave (KD2MOB), , Bob (KD2BKD), John (KD2NRS) and Tom (N2ST). Dave, Bob, and John received their GOTA pins for their Field Day participation at the August business meeting.

At Deadline:

Paul (W2IP) reports that the Quad-band beam is repaired for now; however, it will need additional attention. The Antenna should be good for use for the upcoming QSO parties. Many thanks go out to those that helped make this happen.

Gordon (W2TTT) now wears three ARRL "hats"-- he added the District Emergency Coordinator for Bergen County. He was also appointed by the Section Manager as a Technical Specialist to help folks with questions about various aspects of Amateur Radio in addition to his current role on the ARRL Electo-Magnetic Compatibility (EMC) Committee.

August 4, 2017 Meeting Notes (1)

President Judith KC2LTM called the meeting to order at 7:31p.m.

The members rose and recited the Pledge of Allegiance. President Judith KC2LTM asked if there were any visitors or new members present. Bruce KC2UKS, a new member, introduced himself and said that he had just upgraded to General. The members present applauded Bruce's accomplishment. Visitor Nomar NP4H introduced himself to the members.

President Judith KC2LTM requested Secretary Randy WU2S to determine if a quorum was present to conduct club business. Randy called the roll of officers and trustees and all were present.

President Judith KC2LTM asked the members present to wait to be called upon to speak since there was a very full agenda with a lot of topics to cover.

Secretary Randy WU2S announced that the minutes from the July meeting were emailed to all members and that they had also been published in the latest edition of the club's newsletter, The Resonator. He asked the members present if there were any corrections or amendments needed. There were none so Zach KC2RSS moved to accept the minutes as published and John KD2NRS seconded the motion. The motion passed by acclamation.

Treasurer Nancy N2FWI read the current treasurer's report. Dave NK2Q moved to accept the report as read and Fred W2ABE seconded the motion. The motion passed by acclamation.

President Judith KC2LTM asked Tom N2ST to come forward for a presentation. Tom recognized four more FLARC members for their participation in this year's Field Day Get On The Air (GOTA) station. All four made their first HF contacts with guidance from Tom and Karl W2KBF. The members who received a GOTA pin were Bob KD2BKD, John KD2NRS, Dave KD2MOB and Peggy KD2MYN. The members present applauded their new accomplishments.

Continued on page 2.

August 2017 Meeting Notes (2)

Secretary Randy WU2S reported for the Technical Committee. He summarized the committee's plan to repair the quad-band beam antenna in time for the forthcoming contests. Joe (no call) asked about the club's procedure for managing equipment donations. Randy explained that the officers, with the guidance of the Technical Committee, determine what to do with any club equipment.

Special Note 1 from the Technical Committee:
On Saturday, August 5, The Technical Committee, consisting of chairman Paul W2IP, Randy WU2S and Fred W2ABE met to review the current state of the club's work area. Paul said that some unauthorized club member had recently stacked up books and a piece of wood under the workbench shelf on the right side to support some heavy equipment which should not have been placed there, and which created a potentially dangerous condition. The Technical Committee reminds members, in order to maintain a safe and neat facility, to refrain from arbitrarily moving club equipment without authorization from a club officer. Paul called attention to how he had safely arranged the club's test equipment with care to make it accessible and to not overload the shelves.

He noted that the recent test equipment donations of an oscilloscope and a frequency counter are located on the right-hand shelf over the workbench in clear view, easily accessible and near the power strip. The donated function generator was placed below the left-hand workbench since it is too heavy to place on a shelf at this time. Paul completed this arrangement over a week ago so that the generous test equipment donation would be highly visible and useful for all members. Paul also said that we have several working tube testers and other test equipment on the neatly arranged shelves.

The Technical Committee decided to build another shelf on the right-hand side in the next few weeks. This additional shelf space will be able to accommodate lighter equipment and tools.

The committee recently discarded several older pieces of equipment, including a nonworking tube tester with a dangerously frayed power cord.

August 2017 Meeting Notes (3)

Special Note 2:
The Technical Committee, with Bennett KO2OK and Zach KC2RSS, successfully repaired the quad-band beam antenna. Bennett did the tower climbing and the installation of new insulators and feed points. Paul W2IP fabricated replacement feed points for the broken parts. The antenna was tested for full rotation to ensure that the coax cable would not bind on the tower as the beam was turned. The SWR on all four bands (20, 17, 15 and 10 meters) was under 1.5 to 1.

Special Note 3:
In response to last month's question about a solder fume extractor, the club has one and it is located on the top shelf above the workbenches. Joe (no call) donated some filters for this unit. The Technical Committee reminds members that when soldering, they must wear eye protection, use the fume extractor, and keep soldering irons from burning people or the workbenches.

Dave NK2Q reported for the Publicity Committee. He announced that on August 18 we are looking for seasoned FLARC members to tell us their stories about the club's history and their experiences.

On September 15, we will have a discussion about planning for Field Day 2018.

The Fall Fair Lawn Street Fair is on Sunday, October 15 and we will again have a presence there.

On October 20, we will host guest speaker Ria Jairam, N2RJ. Ria is a well-known contester and member of the Frankford Radio Club. She will speak to us about women in amateur radio, the use of software-defined radios (SDR) and how to set up a world-class radio station. This presentation will be at the Fair Lawn Senior Center.

On November 17, we are trying to have guest speaker Jonathan Taylor, K1RFD, speak to us about setting up and using Echolink. His appearance is not yet confirmed.

Continued on page 2 .

August 2017 Meeting Notes (4)

The annual FLARC Auction will be on November 24, the day after Thanksgiving, in the Fair Lawn Senior Center.

On December 15, we plan to host ARRL Hudson Division Director Mike Lisenco, N2YBB, to hear his remarks on the current state of amateur radio. This presentation will be in the Fair Lawn Senior Center.

Van W2DLT announced two upcoming events. The North American QSO Party is on August 19 and 20. We plan to operate at the club on Saturday August 19 from 2:00 p.m. until closing. The New Jersey QSO Party is on September 16 and 17. We plan to operate at the club on Saturday September 16 from 12:00 noon until closing. Contact Van via email if you are interested in operating a club station during either of these events.

Gene WO2W reported that there are Technician license classes being conducted by the Fort Lee radio club on August 18, 19 and 20.

Steve WA2BYX announced that the Solar Eclipse QSO Party will be on Monday, August 21. We are looking for people to operate on CW, RTTY and PSK. The members were asked if there is interest in operating from the club facility during Monday afternoon. About 12 people indicated their interest. The club is considering operating from Berdan Grove, weather permitting. Gene WO2W noted that we will need permission from the Recreation Department if we want to use that location. President Judith asked who is leading this event. It was determined that Ed WX2R will be the leader for the club's Solar Eclipse QSO Party operations. Karl W2KBF volunteered to assist the effort. President Judith asked for a motion to designate this operation as a club sponsored event. Karl W2KBF so moved and Jim W2JC seconded the motion. The motion passed by acclamation.

Jim W2JC displayed a large, attractive poster that he had made for the Solar Eclipse event. It explains the scientific experiment that is supported by ham radio operators. Jim generously donated this poster to the club.

President Judith KC2LTM asked if there was any old business and there was none.

Nancy N2FWI announced that the Passaic County Fair will be on August 17 through 20 at Garrett Mountain. Ham radio operators will assist the Sherriff's Department by providing communications support. If you are interested in helping, please contact Nancy.

August 2017 Meeting Notes (5)

President Judith KC2LTM announced that next Friday, August 11, Steve WI2W would start offering the club's end-fed portable antenna kit for sale. He, Randy and Karl will assist members in building the kits. We will use the Teen Lounge in the basement for this activity. President Judith KC2LTM said that she is working with Jim Graff, Superintendent of Recreation and Parks, to get better access to the conference room and the card room.

Dave NK2Q asked how other users of the Fair Lawn Community Center affect our ability to use the rooms. Gene WO2W described how Fair Lawn schedules the use of the facility. A discussion ensued with suggestions from Susan W6SKT, Gordon W2TTT, Tom N2ST, Karl W2KBF, and Tony N2SIQ. Gene WO2W made a motion for the FLARC Council to consider opening the club on other nights in addition to Friday and Robert KD2NOG seconded the motion. The motion passed by acclamation. President Judith KC2LTM said she will start the discussion with the Council and make sure that we have the normal safeguards for opening the club in place.

President Judith KC2LTM announced that ARRL Northern New Jersey Section Manager Rob KA2PBT gave the club an ARRL book on radio propagation for our library when he attended the solar eclipse presentation recently.

President Judith KC2LTM said that the Health and Welfare activity managed by Al WA2OWL has been busy this month. The wives of Skip KD2BRV and Randy WU2S were ill and were sent cards on behalf of the membership. She also said that Mary Ann, K2RVH, the wife of Gene, K2KJI was also ill. President

Judith KC2LTM observed that the FLARC calendar on the website is always up-to-date with our planned events.

Jim W2JC said that each individual month in the club calendar has the details on daily activities.

Ron KC2TBD announced that has had spoken recently to Stu N1STU, who sends his regards to FLARC members. Ron said that Stu is trying to join the members via Echolink on the Monday night net.

Having no further business, President Judith KC2LTM asked for a motion to adjourn. Bill KB2OCJ so moved and Zack KD2RSS seconded the motion. The members present voted in favor and the meeting was adjourned at 8:24p.m.

Respectfully submitted, Randy WU2S, Secretary

Member Profile (Continued)

What other ham related clubs or organizations do you belong to?

I don't belong to any other ham clubs but I have met many other ham's on other repeaters that are not affiliated with FLARC. I view ham practitioners as being part of the same clan than being on opposite teams. I am also a proud member of the NRA, Sons of Italy and a few small computer clubs. Thanks for the interview!

One final question... your hat seems to be a trademark ... how did that come about?

This trademark started back in my days when I was working at the UPS hub in Secaucus. I was working as a designated responder which entailed me being at any location inside or outside the hub. There was no air conditioning or heating system in the hub so I started to wear a bright orange winter hat that I purchased at a dollar store. You may think why would you buy a hat for your job at a dollar store and I shall say that my work was incredibly filthy so cheap throw away clothing was the fashion.

I kept wearing the hat and I discovered that because of my illustrious long hair if I flipped my pony tail above my head and used it as a make shift nest, I could then fill my hat with ice cubes and don the hat. It would keep me very cool and because of my hair it would not make me uncomfortable.

I was renowned as the man with the orange hat. It took people a long time to realize that I had cubes of salvation hidden within that dollar hat. You'll be happy to know that I still have the hat at home. To tell you the truth a lot of people would always ask me about the hat so I kept wearing it, so much that I forget it's on most of the time.

Robert (KD2NOG)

Past FLARC Member Profiles

Here is a list of past member features and we welcome your recommendations for new profiles -- including your own.

Month	Name	Call Sign
January 2016	**Pete**	**KB2BMX**
February	**Marco**	**KC2ZMA**
March	**Ron**	**KC2TBD**
April	**Kai**	**K2TRW**
May	**Larry**	**WA2ALY**
June	**Dave**	**NK2Q**
July	**Steve**	**WI2W**
August	**Thom**	**N2DI**
September	**Brian**	**KD2KLN**
October	**Brad**	**KD2GNY**
November	**Al**	**WA2OWL**
December	**George**	**W3EH**
January 2017	**Fred**	**W2ABE**
February	**Dave**	**KD2MOB**
March	**Randy**	**WU2S**
April	**Lee**	**KD2DRS**
May	**Gene**	**WO2W**
June	**Carol**	**KD2NMV**
July	**Kevin**	**KC2KCC**
August	**Robert**	**KD2NOG**

By the way, Randy (WU2S) has compiled a binder of all back issues of *The Resonator* and it's located in the club office. Thanks Randy!!! Back issues are also available on our website.

A Look Back
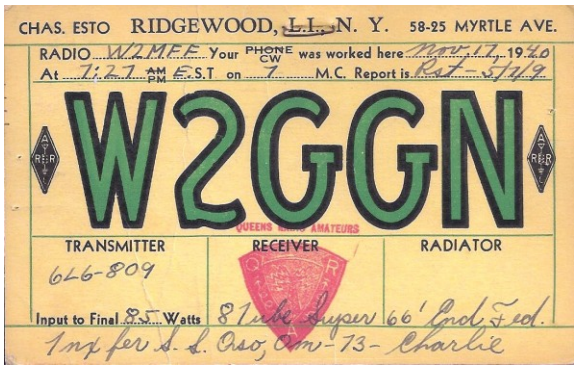
A **1940** QSO between W2MFF and W2GGN. Note the "separates" (individual transmitter and receiver) the "radiator" and the use of RST. WWII put an end to ham radio slightly more than a year later.